World Robotics League®

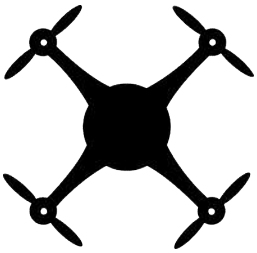

AERIAL ROBOT CHALLENGES

CHALLENGE 1: COLLECT AND DELIVER ROBOT

INSTRUCTIONS BOOKLET

Revision 1.0	Initial Release

http://worldroboticsleague.com/

TABLE OF CONTENTS

1 IMPORTANT NOTES 3

2 THE CHALLENGE 5

2.1 Time Available to attempt the challenge 8

2.2 Game Element Designs 8

3 CHALLENGE CONDITIONS AND RULES 13

4 SCORING 13

5 TEAM REGULATIONS 14

6 AWARDS 15

7 ROBOT RUN RULES 15

1 IMPORTANT NOTES

For World Robotics League®, the constitution and Manifesto which describes the acceptable behavior of help from Parents, Coaches and Mentors is present here.

This World Robotics League® challenge is an aerial robot (drone or other aerial robot) based challenge which means that it will be performed using an aerial robot in a cubical 3D area. Unlike other challenges, given the exceedingly high cost to entry in this field with programmable drones, at this point of time, the challenge will only be offered in the remote-controlled manner. We recommend the Syma x5c, a low cost, but sturdy and stable drone for this challenge. Any drone under 12 inches length and width is acceptable for the challenge as long as it does not use any advanced sensors such as GPS, distance or other sensing as this challenge is primarily based around the operator skill and sensors must not be used to ensure that all participants abide by the same set of rules for sake of fairness. The only exception to the sensor rule is the Gyro sensor based stabilization that is present in many drones to allow for a frustration free, stable operation.

As part of the challenge design, and to make it easy for everyone to be able to create the challenge field we are providing actual 3D designs that we use to create the challenge. With the 3D Design (also called CAD design), you can zoom into the field and models, rotate them or in any other way look at the details. Using the CAD design you can even measure any part of them. The 3D format is known as the *eASM format.* We strongly recommend you to install the free eDrawing and eAsm viewer provided by Dassult/solidworks, from following site to be able to view the eASM files:

http://www.solidworks.com/sw/support/edrawings/e2_downloadcheck.htm

IMPORTANT: Note that as a point of reference, in the rest of the document, all units are specified in feet and inches unless otherwise specified.

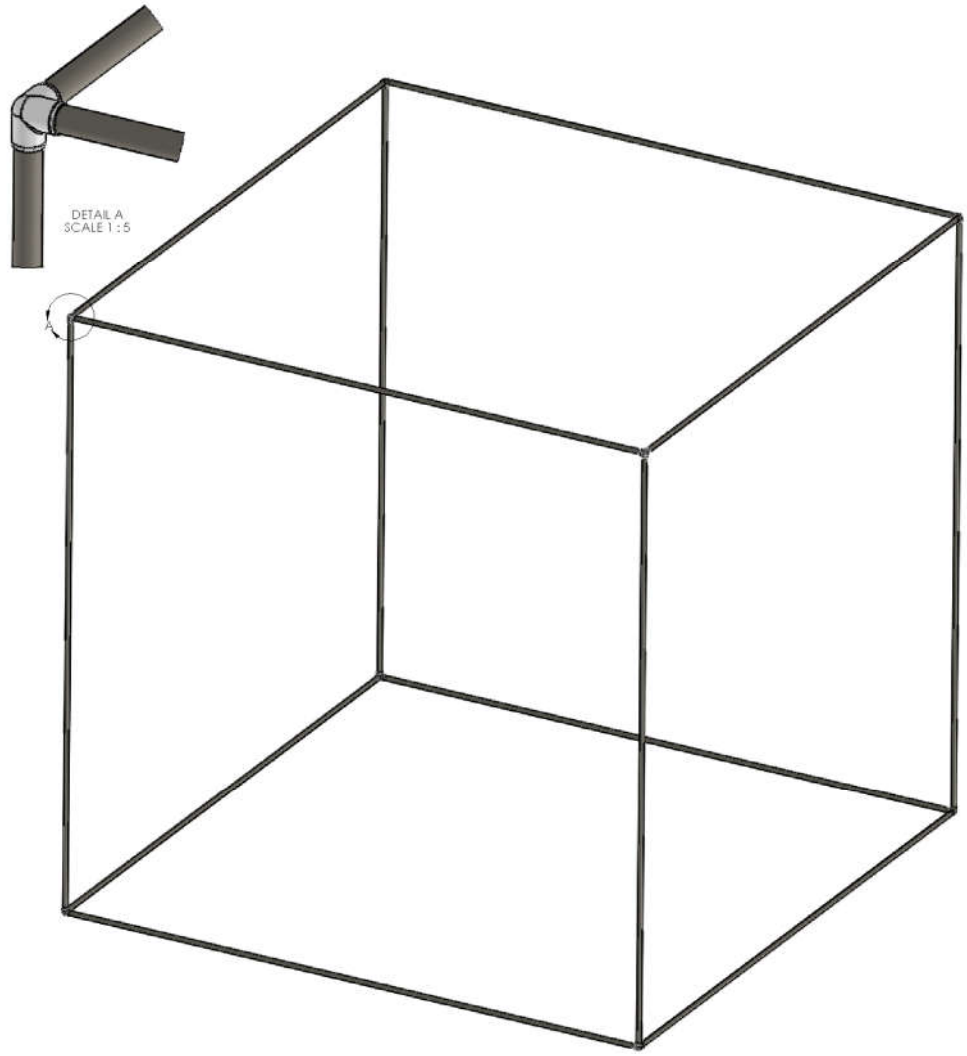

Figure 1 : An example of PVC pipes can be used to build challenge field.

As described in Figure 1, the 3D spaces can be built using PVC pipes and that is how official challenge field will look like if you attend an event in-person. However, for all video submissions and in-home attempt of the challenge, a PVC field is completely optional. The parts of the field above of the ground do not need to be created for sake of simplicity. Rather, only the regions of the field that are on the ground should be marked using any easily available material such as ropes, strings, tapes or even chalk. The only requirement around the marking of the elements on the ground is that they MUST be easily visible in the video.

The overall drone challenge field volume is 24ft X 24ft X 24ft. However, to ensure that it is not prohibitively difficult for participants to create the challenge field, we are relaxing the requirements for the playing field so that while the drone is in the air, it may stray out of the bounds of the playing field. However, the robot drone MUST not ever land outside the challenge area present on the ground or penalties will apply (details provided later.)

2 THE CHALLENGE

Robots are extensively used in material handling applications. The aerial robots are used for material delivery in time critical scenarios. Additionally, the aerial robots are used to deliver and retrieve items when terrain is difficult to traverse.

The current challenge describes a scenario where sensors (also referred to as payload interchangeably in the document) to collect geological, weather and geo-positional data are spread across a geographical area. However, accessing these sensors using a ground vehicle is extremely difficult. Aerial robots are deployed to collect the sensors and deliver them to base station for repair and servicing.

The complexity of collecting the sensors increases with the distance as well as orientation of the sensors.

As an aerial robotic expert, you have been requested to design the attachment for the robot and come up with a strategy to collect the sensors.

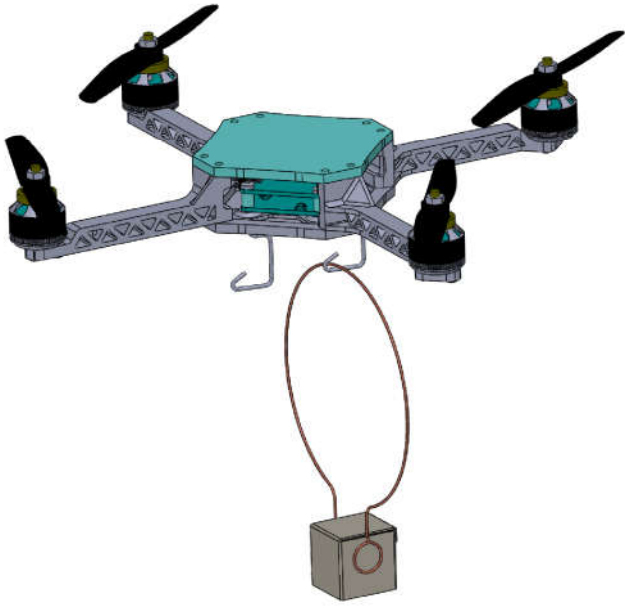

Figure 2 A hypothetical aerial robot carrying payload

The sensors are distributed within a field that is described in Figure 310: Challenge field, perspective view, Figure 47: Challenge field layouttop-view (Drone base, Destination and payload placement) , Figure 59 and Figure 12 and the *drone base* describes the starting position of the aerial robot. The field elements

marked payload-1, payload-2…payload-12 represent the sensors that the aerial robot MUST retrieve. The challenge for the aerial robot is to collect the sensors and deliver them to the destination area.

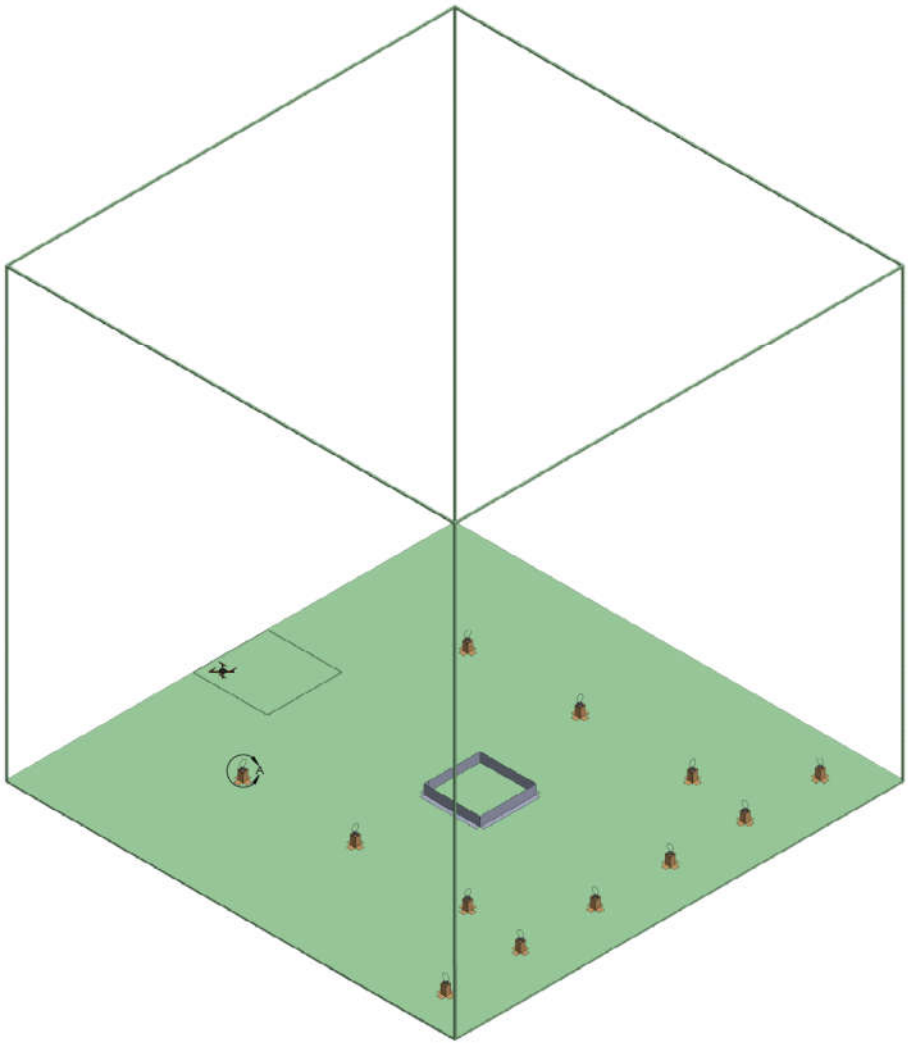

Figure 3: Challenge field, perspective view

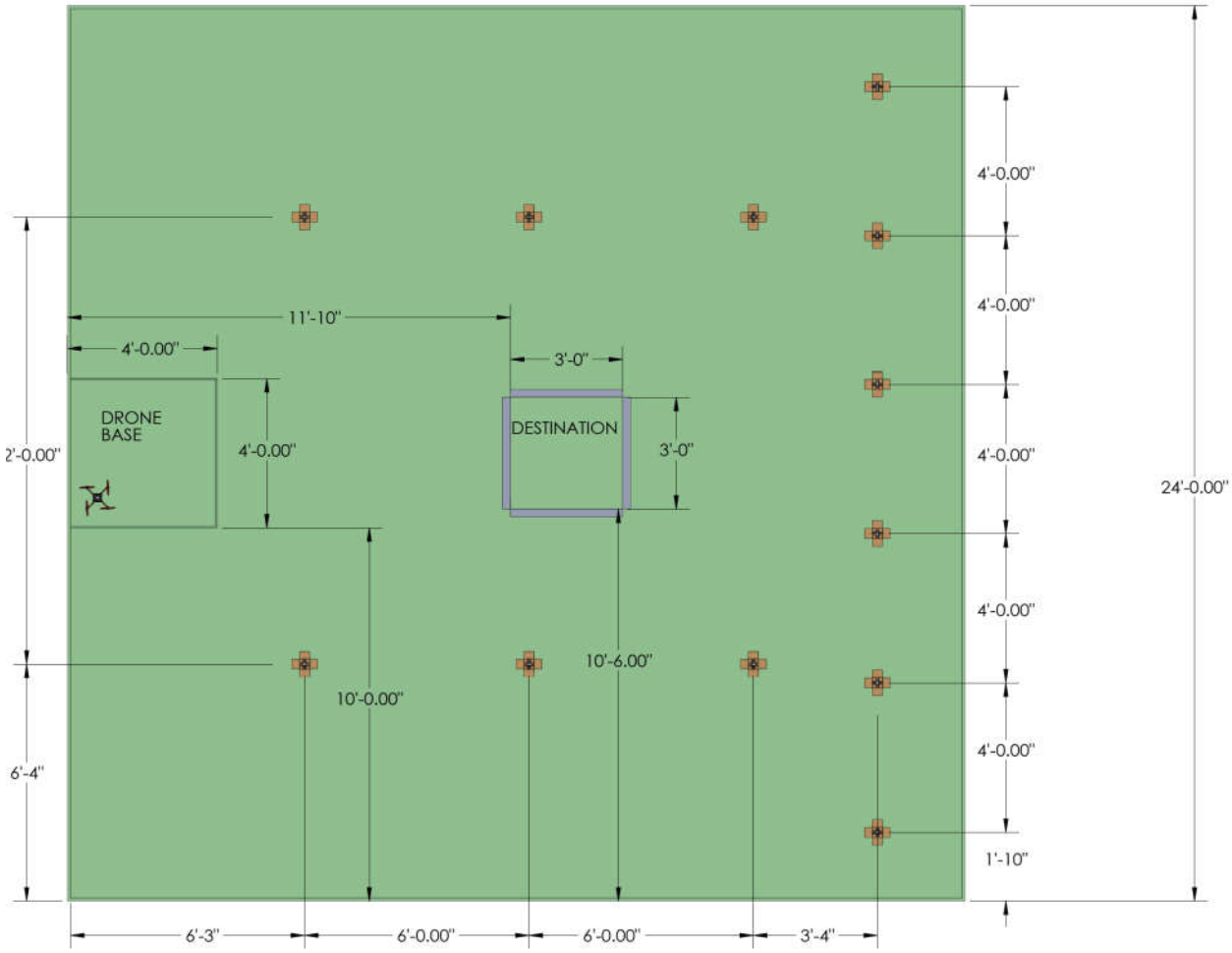

Figure 4: Challenge field top-view (Drone base, Destination and payload placement)

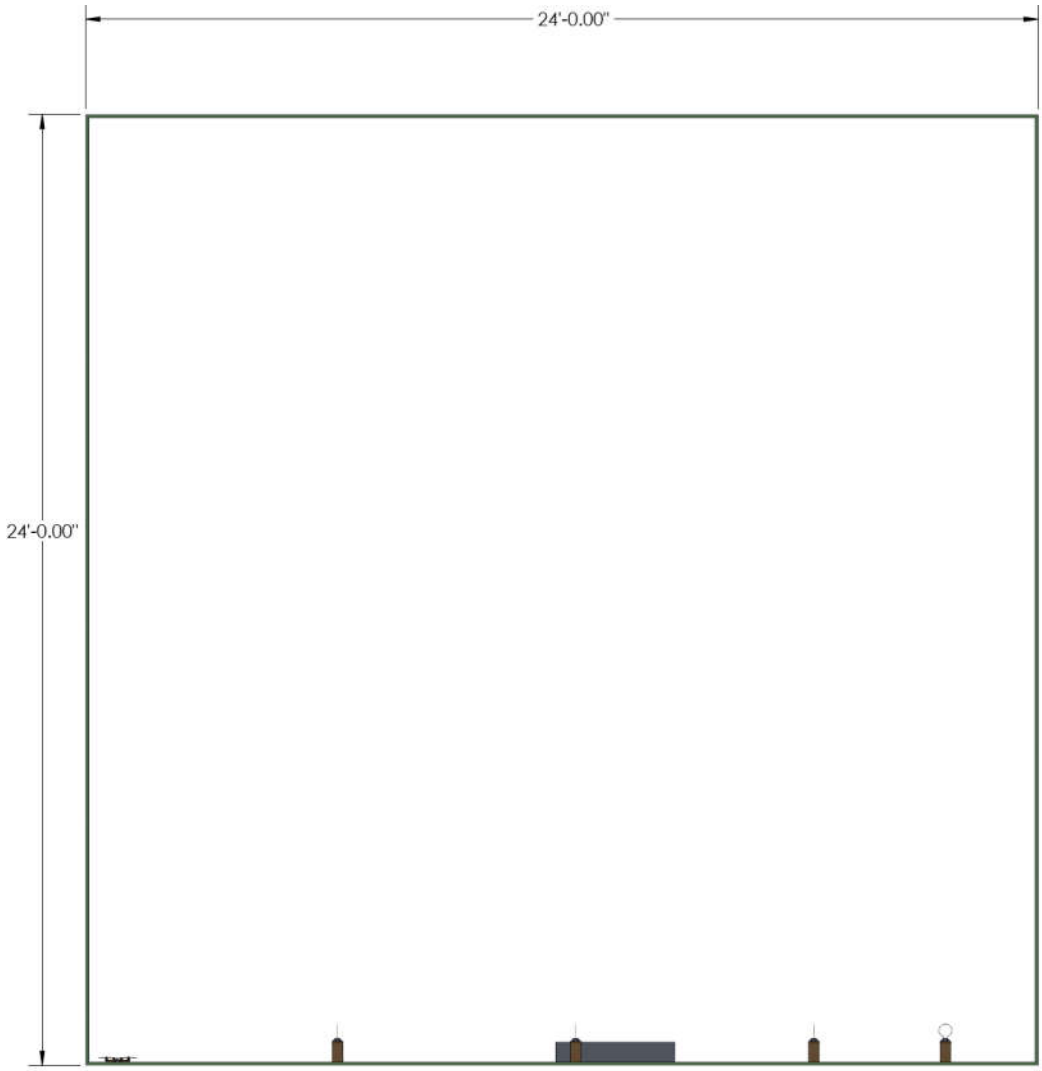

Figure 5 : Challenge field, side view

2.1 TIME AVAILABLE TO ATTEMPT THE CHALLENGE

The total time to attempt the challenge is ***10 minutes.*** This includes any time required to change the batteries, repair the drone, change any attachments and load/unload any other game elements once the game timer has started.

2.2 GAME ELEMENT DESIGNS

In this section, we are describing how to create the various game elements required for the challenge by using easily available cardboard. To create these elements, we are using methods to create cardboard boxes by taking a flat piece of cardboard and bending it along certain edges to create the necessary elements. (Fun fact: This is a methodology derived from sheet metal manufacturing)

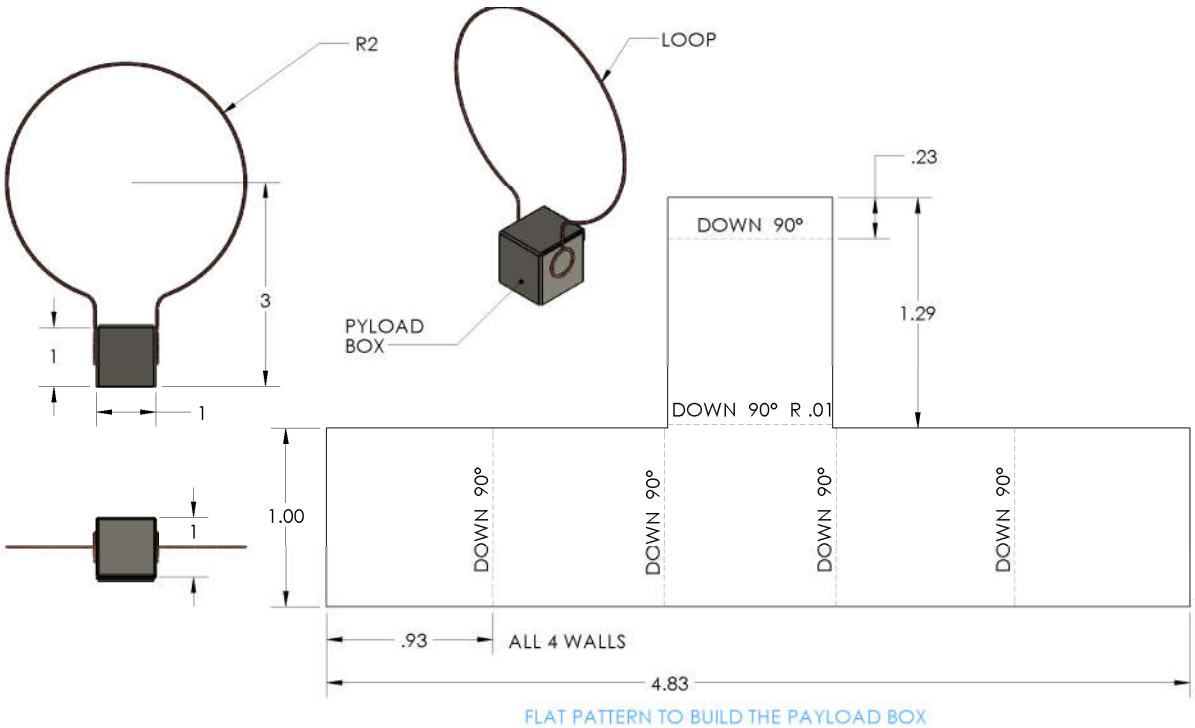

Figure 6 : Payload geometry and scheme for building payload representing the sensors (dotted lines show the point at which cardboard is bent)

The sensors (payloads) i.e. the aerial drone payloads to be carried to destination, are built using 1mm thick cardboard. A lightweight 0.032in (0.81mm) diameter aluminum, copper wire or other wires available at hand can be used to build the payload. The payload geometry is described in Figure 62 .The figure also describes cardboard flat pattern to build the payload and the wire geometry to build the loop. You may cut the flat pattern, fold it and then glue/tape the edges to build the payload. The payload is placed on a tower and is secured using retaining walls to ensure that it does not move when the down draft (wind) from the aerial robot pushes it.

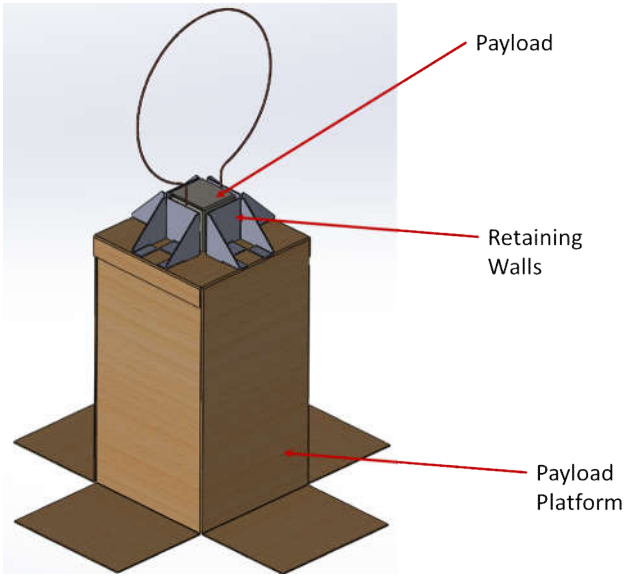

Figure 7 : Placement of payload inside on the Payload platform

Figure 73 describes the placement of payload on the payload platform. The payload platform has four retaining walls on the top that secure the payload. You must ensure that the payload platform is immobile by tethering the payload platform on the ground using tethering pins, stones or other heavy objects that don't hinder the aerial robot movement. Tethering the platform is necessary, otherwise, the wind from the aerial robot will likely tip it over.

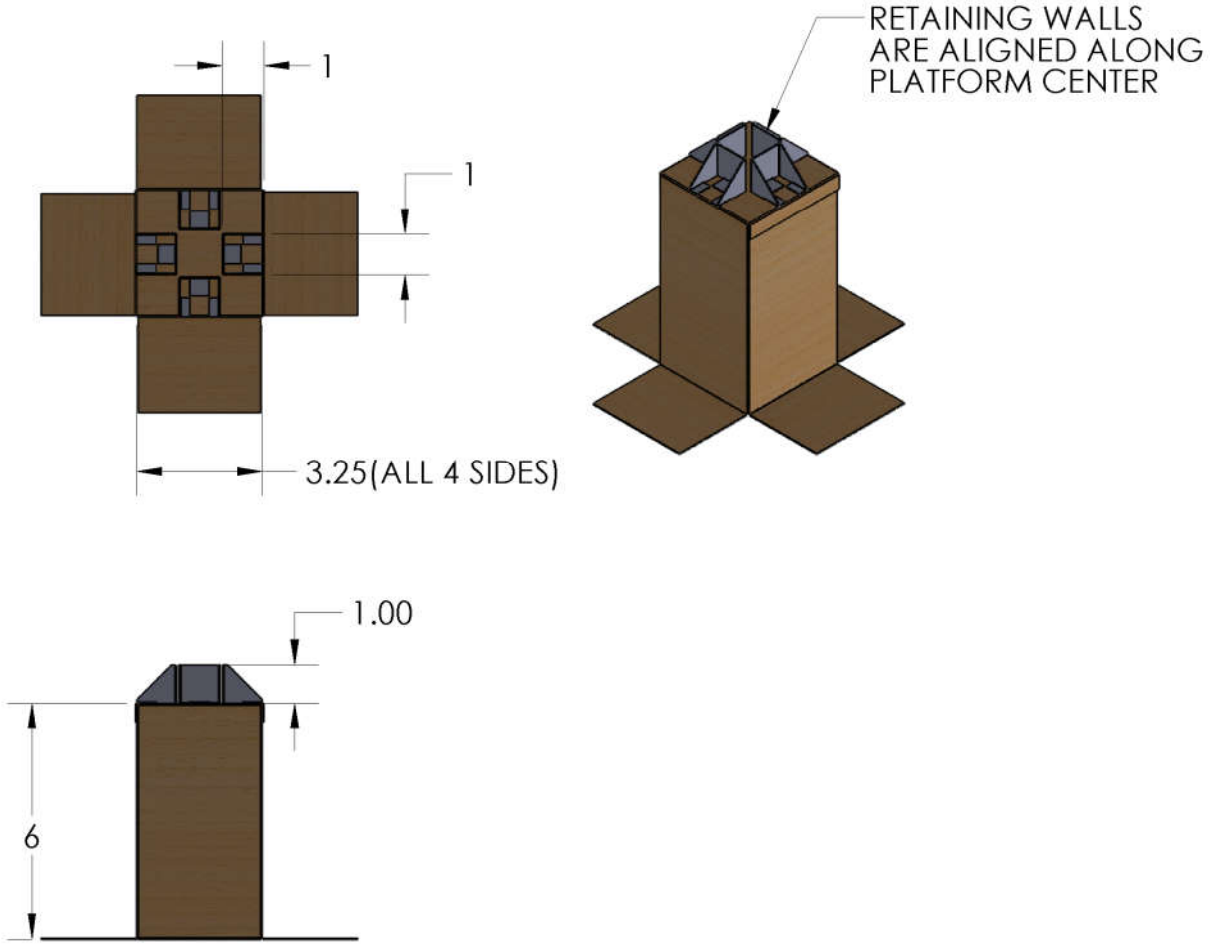

Figure 8: Payload tower

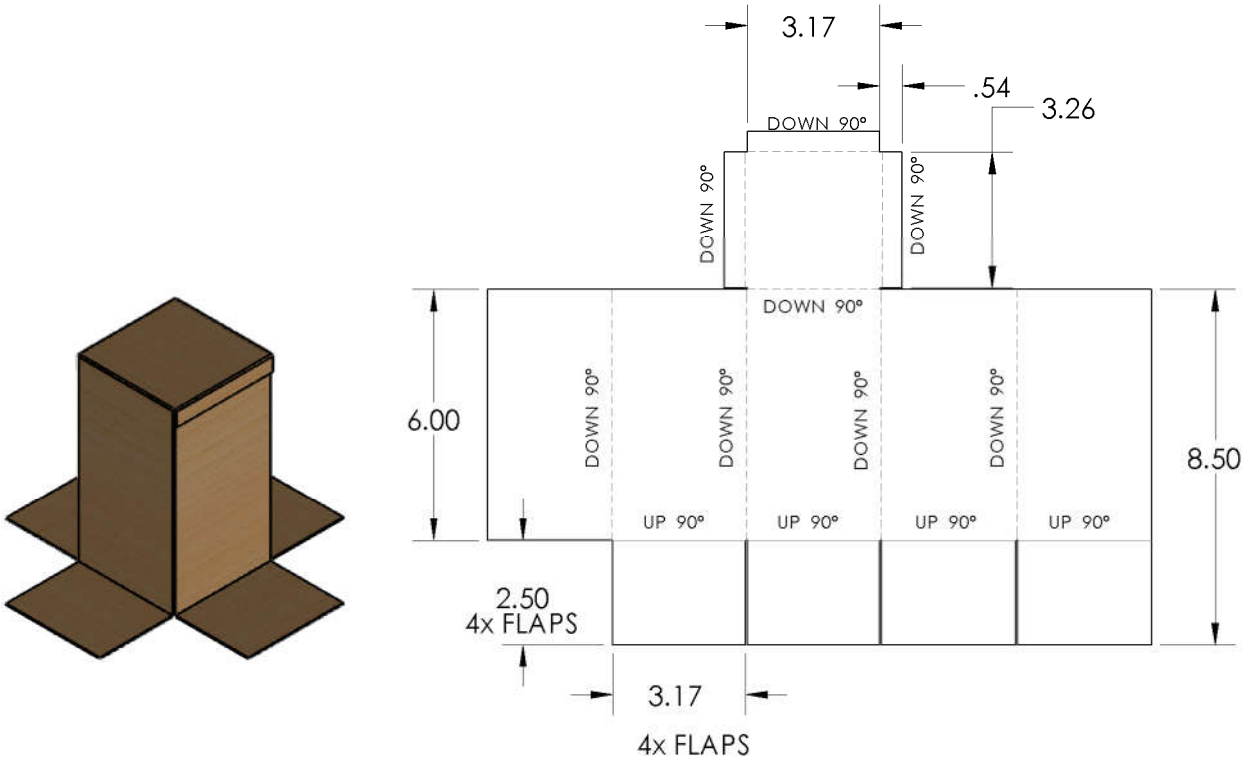

Figure 9 : Flat pattern for the tower structure (dotted lines show the point at which cardboard is bent)

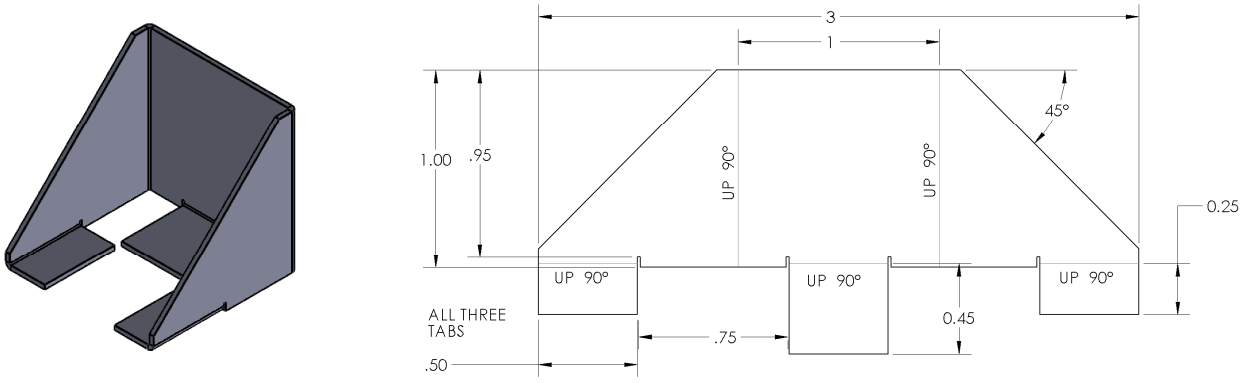

Figure 10 : Retaining structure for the payload and flat pattern(dotted lines show the point at which cardboard is bent)

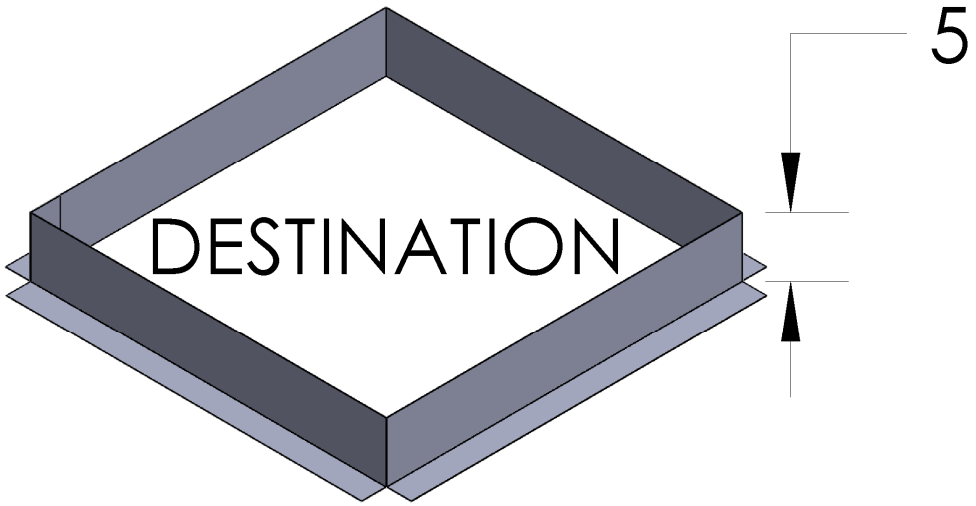

Figure 11 : Wall height for Destination. This is simply a cardboard boundary 5 inches high and 3 ft in length and width (see Figure 47 for the length and width)

3 CHALLENGE CONDITIONS AND RULES

- In this challenge, the robot MUST NOT bring any payload to the base. In case a payload is brought to the base, any score associated with that payload will be forfeited.
- When multiple teams are competing at a common venue, each team will be given two opportunities and the Maximum of the two runs will be considered as the actual team score. For the submission by video, only one video per team is allowed.
- For this challenge, if your aerial robot falls in the field or gets stuck in a configuration where it is not in a position to fly again, you may pick up the robot and restart the robot rom robot base. *There is a 10-point penalty for picking up the robot outside the base.* If a Robot has moved payload, the payload must be left at the point.
- If the aerial robot touches the field at any point of time during the operation, there is a 5 point penalty that will be assessed.
- The aerial robot may move the sensors to the destination in any order.
- It is allowed for the aerial robot to move one or multiple sensors at a time.
- To satisfy the requirement that a payload has reached the destination, the payload should be visibly present inside destination boundaries and touching the floor in the destination area at the completion of the challenge.

4 SCORING

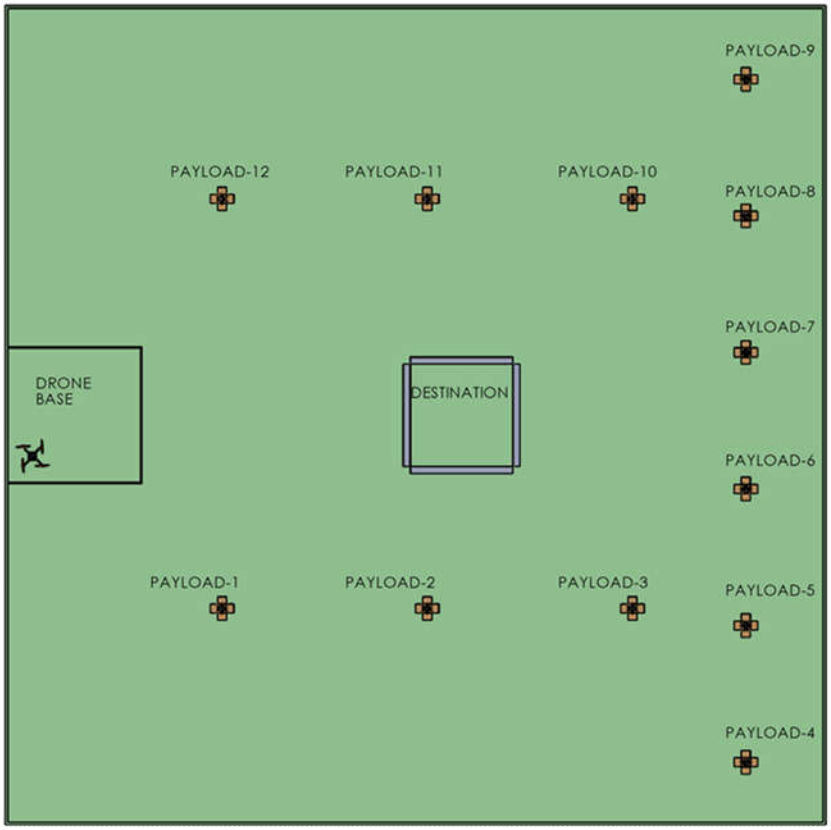

SCORING

PAYLOAD NO	CONTACT	PICKUP TO CLEAR RETAINING WALLS	HOVER AT DESTINATION POINT	DROP IN DESTINATION	SUBTOTAL
1	5	10	12	15	42
2	7	10	12	15	44
3	10	10	12	15	47
4	14	15	15	20	64
5	14	15	15	20	64
6	12	15	15	20	62
7	12	15	15	20	62
8	14	15	15	20	64
9	14	15	15	20	64
10	10	10	12	15	47
11	7	10	12	15	44
12	5	10	12	15	42
				GRAND TOTAL	646

Figure 12 : Scoring Scheme

The scores are assigned based on the degree of task completed. That is, if the Robot contacts the payload, robot picks up the payload and payload clear the retaining wall Robot reaches above the destination along with the payload and Robot delivers the payload. The respective scores are described in Figure 12.

5 TEAM REGULATIONS

1. Teams may be 1 person individually and at most 2 people.
2. At most two of the team members may be close to the field before starting the run; they will be designated as “Robot Drivers”.
3. Everyone else must stand back at least 4ft inches from the challenge field.

6 AWARDS

- Highest score Award: 3 awards for the top three scores.
- Repeatability: (Applies to the challenges attempted at by multiple teams at a common venue) The robot with most repeatable runs. We want to ensure that the skill of the kids is the largest part of the robot run. The robot that produces the highest scores in a consistent manner will get this award.
- Referees choice (flexible criteria): If a design, program, or teams’ approach is found to be exceptional in any manner; Referees may recognize the team.
- One team may win multiple awards.

7 ROBOT RUN RULES

1. Size of the Robot shall not exceed 12in X 12in X 12 in. The robot base is marked as a 4ft x 4ft rectangle on the field that you should mark using any of the methods specified in the earlier part of the challenge description. If the team is submitting the challenge via video, the team shall include measurement from the top view of the robot in their videos using a ruler or other measuring device before the start of the challenge to confirm that no part of robot exceeds the specified boundary.
2. The clock for the run time for the robot will start as soon as the robot makes the first movement i.e. the rotors of the robot start any significant movement where significant movement is defined as at least one full turn of any of the rotors. The clock, once started, will not stop when the robot is modified or reoriented in the robot base.
3. Your robot MAY use multiple attachments to collect the sensors. However, your robot MUST come back to the base before you may modify the robot attachment or repair the robot. Handling the robot manually by the drivers and re-launching the robot is allowed under the challenge rules provided the challenge timer has not run out.
4. One team can use ONLY one robot during the entire challenge. They must finish with the exact same robot that they started with.
5. If you are submitting video entry:
    a. Your video must describe the team name/number, Season (WRL Aerial 2020), Challenge Number on a A4 size paper.
    b. At the start of the video, you must show a top view to ensure that the robot is within the specified size and no part of the robot is extending beyond 4ft. Additionally, the height of the Robot shall be confirmed by placing a ruler next to the Robot. It is participants responsibility to submit the

evidences for Robot size in a manner that ascertains robot size beyond doubt. Should there be any doubt, referee's decision will be final.

c. The video must be one continuous unedited video through the Robot run duration.
d. The angle of video recording must ensure beyond doubt that robot does not interfere with the walls. Should there be any doubt, referee's decision will be final.

6. If a robot or mechanism created by the participating team starts destroying any fragile mechanisms, the referees will ask the team to immediately stop the robot. The team may reattempt the challenge if the rules allow and if they are still within the allotted time.
7. The robot runs can be attempted indefinite number of times within the allotted time frame. The referee will stop the run if the robot is not finished by the end of the allotted time.
8. There will be two referees present during the judging on either sides of the field, and their combined decision will be final.
9. There will be 2 rounds for each team. Each team will get 1 run in each round. There will be at least 5-minute break between rounds for teams to tweak their programs or robots.
10. Adult help should be limited to non-competitive elements. Adults may help with video recording and time keeping, laying out team details on A4 page as specified in previous sections. We want teams to do the work themselves demonstrably.
11. Referees and Judges may ask the participants to explain their design before the run to ensure that they have done original work by themselves. Each member of the team must be able to answer questions about the design. If a team member cannot answer questions satisfactorily, that team will not be eligible for any awards no matter their score.
12. Should there be any doubt, referee's decision will be final.